Original User Manual
FlexxPump4 Direct (24V DC)

I. Revision history & Imprint

I.I Revision history

The present user manual is the original user manual.

This user manual is only valid for
Product:

Product designation:	FlexxPump4 Direct (FP4 D)
Product revision:	---

User manual:

date of creation:	01.2020
revision of the user manual:	0

This document is protected by copyright.
All rights for layout, content, texts and corporate design are reserved by TriboServ GmbH & Co. KG, © 2020.
All rights, including those of photomechanical reproduction, duplication and distribution by means of special processes (e.g. data processing, data carriers and data networks), even in part and/or in extracts, are reserved by TriboServ GmbH & Co. KG.
The content and technical specifications are subject to change without notice.

I.II Imprint of the manufacturer, distribution and service

Adress:

TriboServ GmbH & Co. KG
Gelthari-Ring 3
D-97505 Geldersheim
tel: +49 - (0)9721 - 473 966-0
fax: +49 - (0)9721 - 473 966-9
E-Mail: info@triboserv.de
Internet: www.triboserv.de

Personally liable company: TriboServ Verwaltungs GmbH

Registered office of the company:	Geldersheim Commercial Register of Schweinfurt Local Court HRA 8848 TriboServ Verwaltungs GmbH HRB 5449 USt.-ID: DE 263 251 758
Managing director:	Dr.-Ing. Michael Weigand
Authorized signatory:	Gerhard Halbig

I.III Table of contents

Chapter	Content	Page
I.	**Revision history & Imprint**	**02**
I.I	Revision history	02
I.II	Imprint of the manufacturer, distribution and service	02
I.III	Table of contents	03
1.	**General information about this manual**	**05**
1.1	Signal words	05
1.2	Warning symbols	06
1.3	Structure of the safety instructions	06
1.4	Symbols for information	06
2.	**Safety**	**07**
2.1	EC/EU Directive	07
2.2	Hazards	07
2.3	Staff	07
2.4	Reasonably predictabel misuse	07
2.5	Usage for the intended purpose	08
2.6	Warranty and Liability	08
2.7	General safety instructions	09
3.	**Description of function**	**10**
3.1	General information	10
3.2	Nameplate and designation	11
3.3	Scope of delivery	11
3.4	Technical data	12
4.	**Transport and storage**	**13**
4.1	Packaging	13
4.2	Transport	13
4.3	Storage	13
5.	**Variants**	**14**
5.1	FP4 D411 / FP4 D211	14
5.2	FP4 D412 / FP4 D212	15
5.3	FP4 D422 / FP4 D222	16
5.4	FP4 D423 / FP4 D223	17
5.5	FP4 D424 / FP4 D224	18
6.	**Mounting**	**19**
6.1	Preparations	19
6.2	Assembly	19

Chapter	Content	Page
6.3	Commissioning	23
7.	**Operation and settings**	**24**
7.1	General information	24
8.	**Input and output signals - External control (PLC)**	**25**
8.1	Pin assignment - External control (PLC)	25
8.2	Input signals - External control (PLC)	26
8.2.1	Control signal 2 seconds	27
8.2.2	Control signal 5 seconds	29
8.2.3	Control signal 8 seconds	31
8.2.4	Control signal 12 seconds	33
8.2.5	Control signal 14 seconds	35
8.3	Output signals - External control (PLC)	37
8.3.1	Empty level	38
8.3.2	Error Overload	40
8.3.3	Error Under- or Overvoltage	41
8.3.4	Critical error	42
9.	**Maintenance and disposal**	**43**
9.1	Maintenance schedule	43
9.1.1	Visual check	43
9.1.2	Cleaning	44
9.1.3	Recommissioning after maintenance	44
9.2	Cartridge change	45
9.3	Disposal	48
10.	**Released accessories**	**49**
10.1	Lubricants	50
10.2	Tube lengths	50
11.	**Appendix**	**51**
11.1	Dimension sheet and installation dimensions	51
11.2	EC/EU Declaration of conformity	52

1. General information about this manual

This user manual contains all necessary information to use FlexxPump4 in the direct version, hereinafter referred to as FP4 D, safely and as intended. In the event that supplementary sheets are attached to these instructions, the information and data contained in the supplementary sheets are valid and replace the corresponding information in this user manual. Any contradictory information contained in this user manual thus becomes invalid.
If you have any questions regarding special applications, please contact TriboServ GmbH & Co. KG (chapter I.II).
The actual and factual operator must ensure and guarantee that these instructions, including any supplementary sheets, have been read and understood by all persons responsible for the installation, operation or maintenance of the FP4 D. Therefore, keep these instructions in a suitable place, ideally in an easily accessible place, in the surrounding area of the FP4 D.
Inform your colleagues who work in the local area of the machine about safety instructions so that nobody gets hurt.
This manual was written in German, all other language versions are translations of this manual.

1.1 Signal words

The following signal words are used in this manual to draw your attention to possible dangers, prohibitions and other important information:

DANGER	This signal word points you to an immediate and threatening risk of serious injury or death.
WARNING	This signal word indicates a potentially imminent danger which can result in serious injury or even death.
CAUTION	This signal word indicates a potentially imminent danger that can result in minor to severe injuries.
NOTICE	This signal word indicates a potentially imminent danger which can result in damage to property.
INFORMATION	This signal word refers to practical application tips or particularly important information when using the FP4 D.

1.2 Warning symbols

The following warning symbols are used in this user manual to alert you to hazards, prohibitions and important information:

General warning sign	Electricity hazard	Flammable material

1.3 Structure of the safety instructions

The safety instructions in this user manual are structured according to the following system:

	CAUTION **The text explains the consequences of disregarding the reference.** ▪ The text shows what to do as an instruction.

1.4 Symbols for information

The following information symbols are used in the text and instructions in this manual:

● Requests you to take action

➲ Shows the consequences of an action

ⓘ Additional information about the action

2. Safety

All persons working with the FP4 D must follow these operating instructions, in particular the safety instructions and the rules and regulations applicable at the place of use. Generally applicable legal regulations and other rules as well as the relevant rules and regulations for accident prevention (e.g. Personal Protective Equipment (PPE)) and environmental protection must be observed.

2.1 EC/EU Directive

Within the scope of the EC/EU Directive, (re)commissioning of a machine on which the FP4 D has been installed and/or fitted is prohibited until it has been clearly established that the machine complies with the provisions of the applicable Directive.
An EC/EU declaration of conformity for the FP4 D can be found in the appendix (chapter 11.2).

2.2 Hazards

In order to avoid danger to the user or damage to the machine on which the FP4 D is used, the FP4 D may only be used for its intended purpose (chapter 2.5) and in a technically safe condition.
Always inform yourself about the general safety instructions (chapter 2.7) before starting to work.

2.3 Staff

Only qualified staff who has read and understood this manual may work with the FP4 D. Local and/or company regulations apply accordingly.

2.4 Reasonably predictabel misuse

Any use of the FP4 D which exceeds the maximum permissible technical data is generally considered to be improper and therefore prohibited.

2.5 Usage for the intended purpose

The following points must be observed for the intended purpose of using the FP4 D:
+ The FP4 D is exclusively approved for industrial use.
+ The FP4 D may be used exclusively in accordance with the technical data (chapter 3.4).
+ Unauthorized structural alterations to the FP4 D are not permitted.
+ Read the user manual and act accordingly.
+ During operation of the FP4 D, a visual inspection of the FP4 D as well as of the lubrication point must be carried out regularly. Any anomalies must be eliminated immediately and the cause rectified.
+ Refilling the cartridge is not permitted.
+ The FP4 D may not be opened or disassembled.
+ Only lubricants approved by the manufacturer may be used.
+ Relevant regulations and rules on work safety, accident prevention and environmental protection must be observed.
+ Work and activities with and on the FP4 D are only permitted with appropriate authorisation (chapter 2.3).

All other uses than the aforementioned intended usage or the disregard of one of the above points shall be deemed improper usage. In this case no liability and/or warranty is assumed.

2.6 Warranty and Liability

If the following items are disregarded, all warranty and liability claims for personal injury and/or damage to property are excluded:
+ Non-observance of the instructions for transport and storage;
+ misuse;
+ Improper or unperformed maintenance or repair work;
+ Improper assembly / disassembly or improper operation;
+ Operation of the FP4 D with defective protective devices and devices;
+ Operation of the FP4 D without lubricant;
+ Operation of the FP4 D with non-approved lubricant;
+ Operation of heavily contaminated FP4 D;
+ Modifications or alterations which may be carried out without the written permission of TriboServ GmbH & Co. KG have taken place;
+ Opening and/or partial or complete disassembly of the FP4 D.

2.7 General safety instructions

The following safety instructions are given for the FP4 D:

DANGER

Damaged or incorrect electrical connections or unauthorized live components lead to serious injuries or even death.

- Have all electrical connection work carried out by qualified personnel only.
- Replace damaged cables or plugs immediately.

NOTICE

Loose or overloaded screw connections can cause damage to the FP4 D.

- Mount and check all screw connections with the permissible torques specified for this purpose. Use a calibrated torque wrench.

WARNING

Lubricants are flammable.

- In case of fire, do not use a water jet to extinguish the fire.
- In case of fire, use only suitable extinguishing agents such as powder, foam and carbon dioxide.
- Observe the relevant safety instructions of the lubricant manufacturer on the safety data sheet of the lubricant used.

CAUTION

Lubricants can cause skin irritations.

- Avoid direct skin contact.

NOTICE

Lubricants can contaminate soil and water.

- Use and dispose lubricants properly.

3. Description of function

3.1 General information

The FP4 D is designed as an extremely compact double piston pump for autonomous operation with grease as the lubricant. The pistons run force-controlled and counter-rotating. The FP4 D is available as a version with one, two, three or four lubricant outlets, see Chapter 5. The outlets are secured by an integrated non-return valve. Approx. 0.16 cm³ of lubricant is pumped during each dispensing operation; multiple dispensers can be set one after the other.
The present FlexxPump4 as D version has to be integrated into an external control (e.g. PLC). The FP4 D has an electrical interface with which you can control and command the FP4 D. Furthermore, the FP4 D enables remote monitoring by output signals in order to be able to query the status and possible error messages (e.g. empty cartridge). By means of various input signals processed by the microelectronics, the FP4 D is controlled to supply the lubrication point with the ideal amount of lubricant.

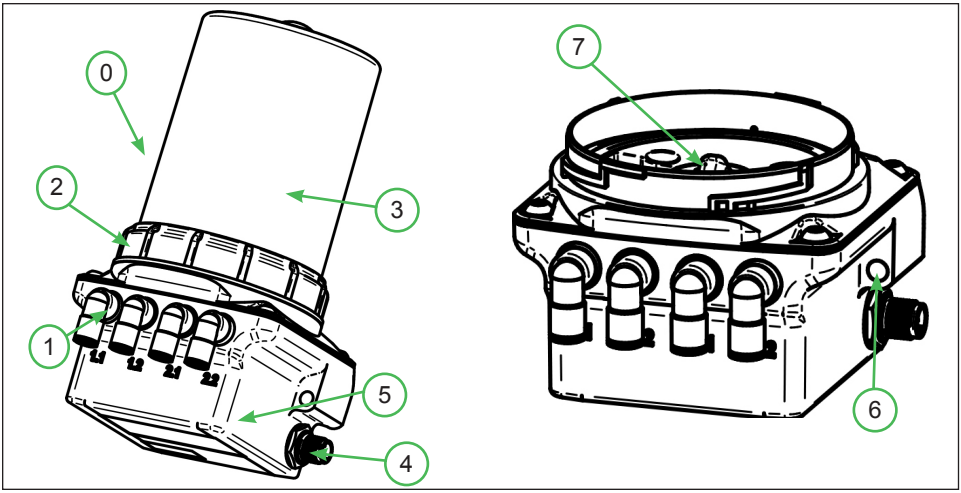

Fig. 1: Overview FP4 D

Nr.	Description
0	FlexxPump4 D (FP4 D)
1	Lubricant outlet, outlets (different versions possible)
2	Retaining ring
3	Housing
4	M12x1 electrical interface
5	Nameplate with designation, CE mark and serial number
6	Through hole for assembly
7	Lubricant inlet with thread for cartridge

3.2 Nameplate and designation

The nameplate of the FP4 D is visibly attached to the side of the pump itself. There the CE mark and the serial number of the FP4 D are visible. Refer to chapter 3.1, Fig. 1 for the location of the nameplate and serial number.

3.3 Scope of delivery

The FP4 D is available in several different versions. They differ in the design (housing for 250ml cartridge or housing for 400ml cartridge), the number and type of lubricant outlets and the scope of accessories supplied.

3.4 Technical data

Housing			
Dimensions without housing		111 x 56,5 x 108 (W x H x D)	mm
Dimensions with housing for 250ml cartridge		111 x 165 x 108 (W x H x D)	mm
Dimensions with housing for 400ml cartridge		111 x 200 x 108 (W x H x D)	mm
Weight (without cartridge)	appx.	1190 til 1300 (depeding on version)	g
Mounting options		holes for screw M6	
Mounting position		upright	
Material		Zinc die-cast / PA 6.6 GF30 / POM	
Material outlet		Nickel-plated brass	
Operating temperature		-15 ... +60*	°C
Lubricant and hydrauilcs			
Cartridge volume		250 / 400	ml
Lubricant characteristics		grease up to NLGI class 2 oil up to 30 000 cSt	
Number of outlets		1 / 2 / 3 / 4	
Hydraulic connection		via PA-Tube	
Number of lubrication points per outlet		up to 4 in conjunction with distributor* up to 14 in conjunction with aluminum progres-sive distributor*	
max. pressure		70 (-10%/+15%)	bar
Steady state pressure		70	bar
Grease delivery	per stroke	0,16 (-5%)	cm^3
Electrics			
Display		nonexistant	
Operating voltage		24 (+/- 5%)	V
Protection		0,75 (slow blow)	A
Protection class		IP 54	
Current consumption		I_{max} < 0,3 $I_{quiescent}$ < 0,025	A
Further information on electrics can be found in Chap. 8!			

* The stated value depends on the specific application and may vary considerably in individual cases depending on the lubricant used and other conditions.

4. Transport and storage

4.1 Packaging

The FP4 D is delivered in an outer packaging (cardboard box) and - depending on the scope of delivery with a lubricant cartridge and other accessories - in the same package. To protect them from moisture and dirt, they are also packed in PE films.
Dispose the packaging materials at the designated disposal points in compliance with the relevant national and company regulations.
After receiving the FP4 D, check the delivery note for completeness and correctness. Any missing parts or damage must be reported immediately to the forwarding agent, the insurance company or TriboServ GmbH & Co. KG in writing.

4.2 Transport

	NOTICE
	Hard shocks, e.g. due to falling or setting down too hard, can damage the FP4 D. ▪ Do not throw the FP4 D. ▪ When using lifting equipment, only use hoists and load handling attachments in perfect condition and with sufficient load capacity. ▪ The permissible lifting weight of the lifting device must not be exceeded.

4.3 Storage

Store the FP4 D in its original packaging in a vertical position in a dry, frost-free environment at an ambient temperature of +5°C to +30°C. The maximum storage time in unopened condition is 2 years.

The so-called "First-In-First-Out-Principle" (FiFo) is recommended for storage logistics.

5. Variants

The FP4 D is designed as a compact central lubrication unit for supplying one or more lubrication points. Depending on the specific application, the FP4 D can also reliably and cleanly supply a limited number of lubrication points with lubricant. In this case, parts of the system accessories from the manufacturer (e.g. splitters, progressive distributors or lubrication gears) can be connected to the FP4 D in order to extend the number of lubrication points beyond the number of outlets. The FP4 D is available as a variant with one or as a variant with two pump bodies. The outlets of pump body (PB) 1 are marked on the housing with 1.1 and 1.2, the outlets of pump body 2 with 2.1 and 2.2.

5.1 FP4 D411 / FP4 D211

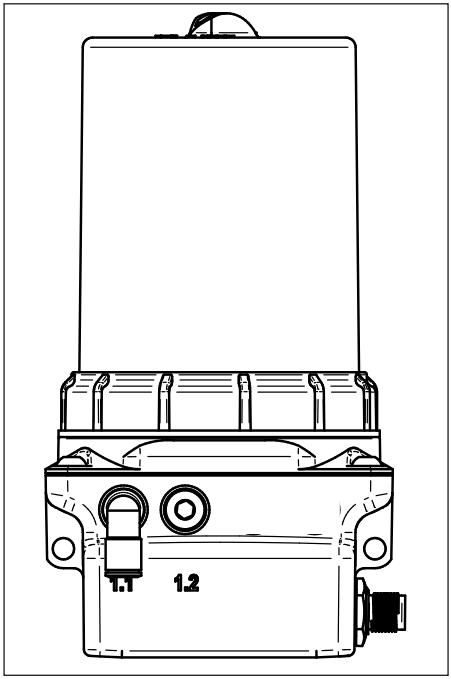

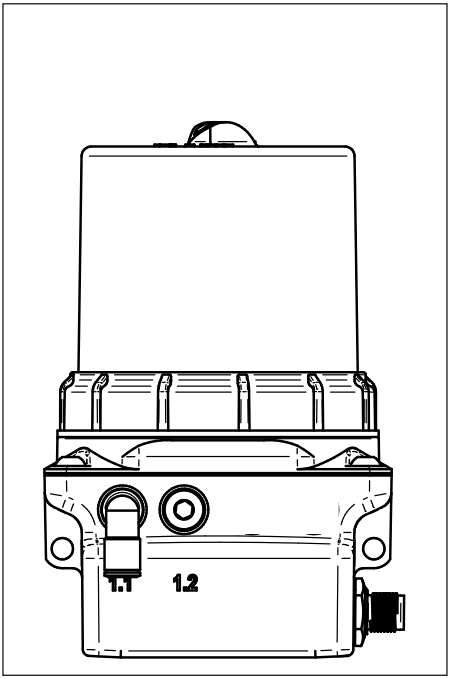

Number of pump units	1
Number of outlets	1
Differences in dosing volume per pump unit possible	not applicable, as only one pump unit

With the FP4 D411 or FP4 D211, the theoretical two outlets of the built-in one pump unit are combined internally. The outlet is supplied with 0.16cm³ lubricant per stroke.

5.2 FP4 D412 / FP4 D212

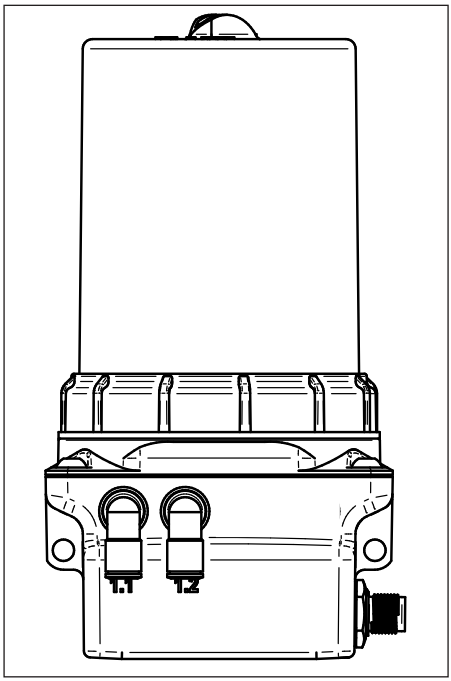

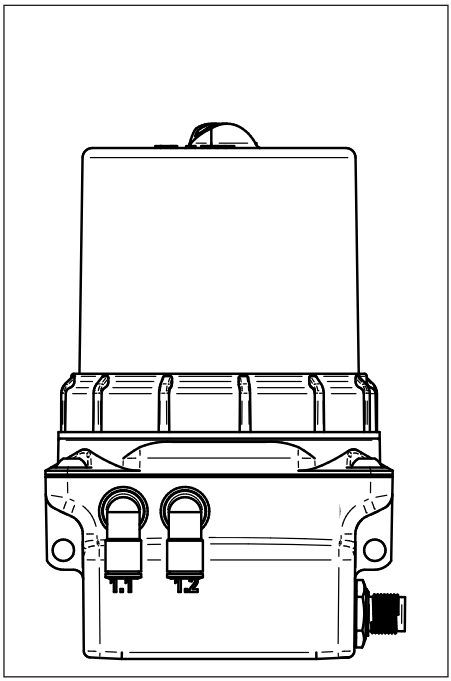

Number of pump units	1
Number of outlets	2
Differences in dosing volume per pump unit possible	not applicable, as only one pump unit

With the FP4 B412 or FP4 D212, two outlets are supplied with the same quantity of lubricant. One outlet is supplied with 0.16cm³ lubricant per stroke. The outlets are supplied with lubricant one after the other.

5.3 FP4 D422 / FP4 D222

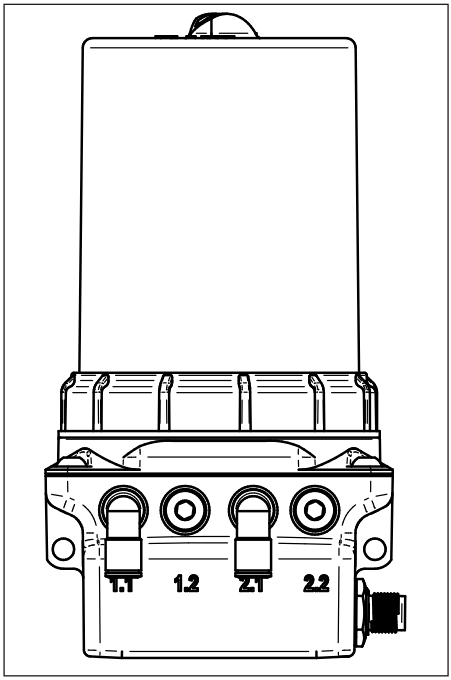

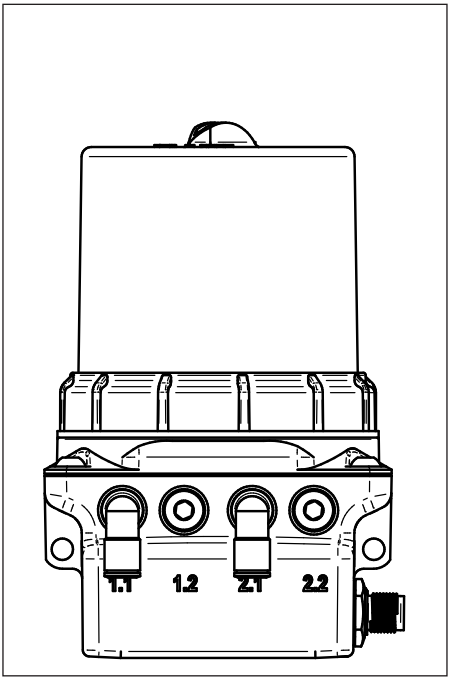

Number of pump units	2
Number of outlets	2
Differences in dosing volume per pump unit possible	yes

With the FP4 D422 or FP4 D222, the theoretical two outlets per installed pump unit are combined internally. One outlet is supplied with 0.16cm³ lubricant per stroke. The outlets are supplied with lubricant one after the other.
The FP4 D422 or FP4 D222 allows to set dosing volume differences from outlet 1.1 to outlet 2.1 by individual control of the two pump bodies. An explanation of the different control signals can be found in chapter 8.2.

5.4 FP4 D423 / FP4 D223

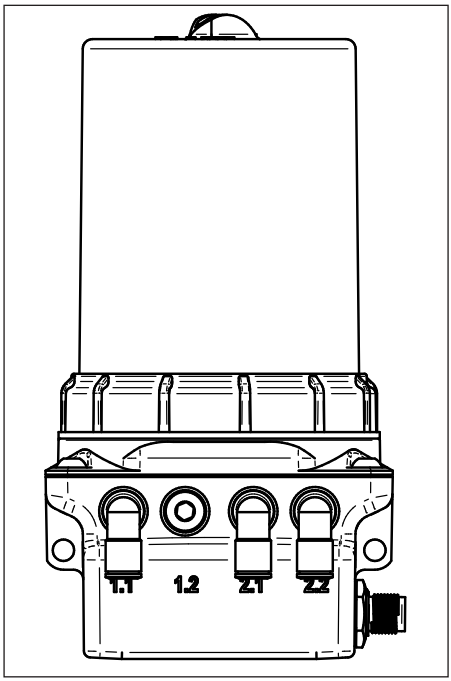

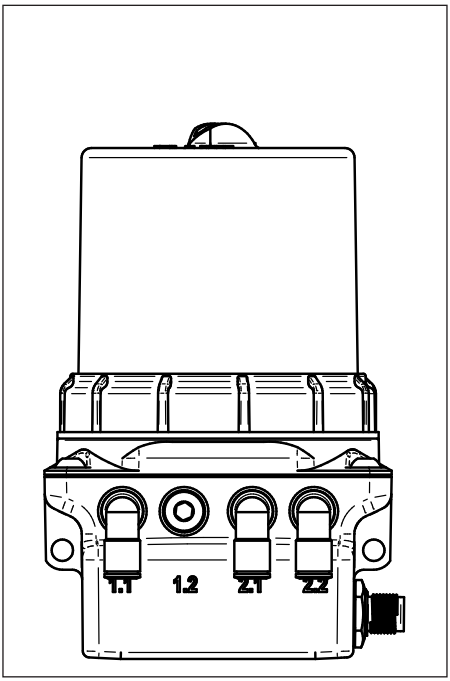

Number of pump units	2
Number of outlets	3
Differences in dosing volume per pump unit possible	yes

In the FP4 D423 or FP4 D223, the theoretical two outlets of the first pump body are internally combined into one outlet 1.1. One outlet is supplied with 0.16cm³ lubricant per stroke. The outlets are supplied with lubricant one after the other.
The FP4 D423 or FP4 D223 allows you to set dosing volume differences from outlet 1.1 to outlets 2.1 and 2.2 by controlling the two pump bodies individually. An explanation of the different control signals can be found in chapter 8.2.

ⓘ If the two pump units are controlled equally, outlet 1.1 is supplied with twice the amount of lubricant of outlets 2.1 or 2.2, due to the internal combination of the outlets of the first pump unit.

5.5 FP4 D424 / FP4 D224

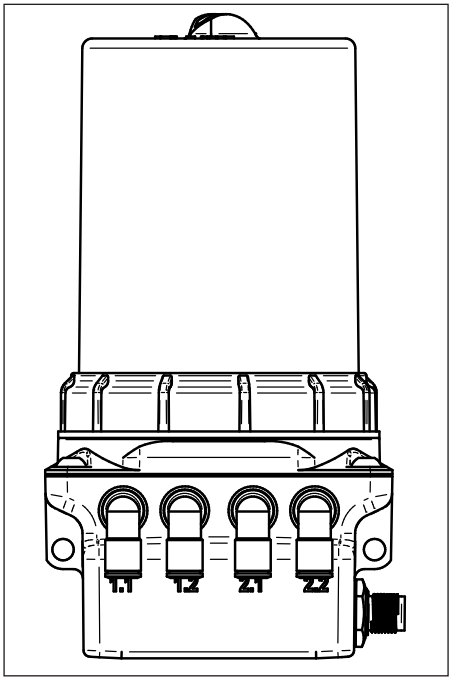

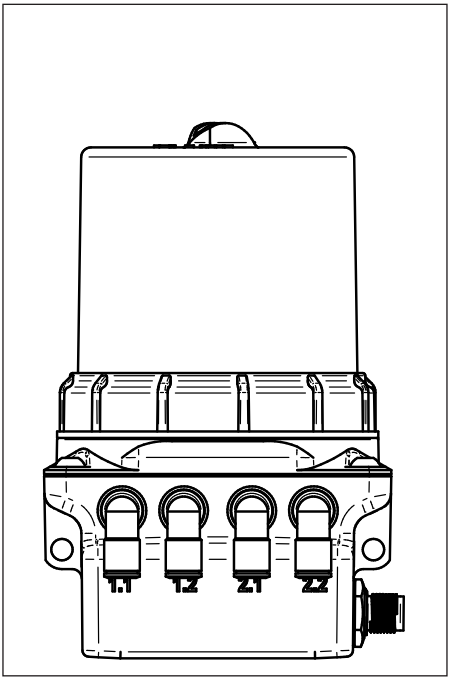

Number of pump units	2
Number of outlets	4
Differences in dosing volume per pump unit possible	yes

With the FP4 D424 or FP4 D224, each possible outlet is operated individually. One outlet is supplied with 0.16cm³ lubricant per stroke. The outlets are supplied with lubricant one after the other.
The FP4 D424 or FP4 D224 allows you to set dosing volume differences from outlets 1.1 and 1.2 to outlets 2.1 and 2.2 by individually controlling the two pump bodies. An explanation of the different control signals can be found in chapter 8.2.

6. Mounting

6.1 Preparations

Before starting to work, inform yourself in detail about the FP4 D using this user manual; in particular about the general safety instructions (section 2.7). Prepare the installation site carefully.

NOTICE

Pressurised air can damage the seals of the FP4 D and can transport dirt and foreign matter into the FP4 D or the lubricant.

- Do not use pressurised air.
- Make sure that there is no coarse dirt in the mounting area.

6.2 Assembly

1. Condition as delivered

The FP4 D is delivered in a cardboard box. Depending on the version ordered, further accessories such as a lubricant cartridge or additional tube connection parts are included.

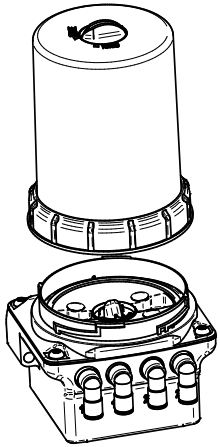

2. Remove the housing from the power unit of the FP4 D.

● Separate the housing from the power unit by turning the retaining ring counterclockwise.

ⓘ Make sure that no dirt, water or foreign bodies enters the lubricant inlet.

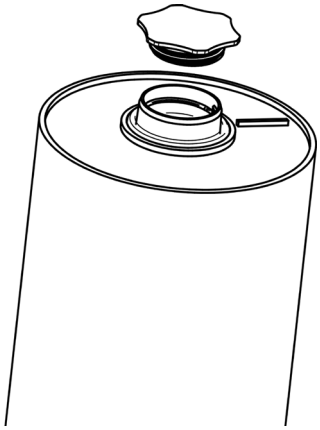

3. Unscrewing the cartridge cap.

● Turn the cap on the lubricant cartridge counterclockwise and pull it off.

ⓘPay attention to cleanliness when carrying out the work. It is imperative that dirt and foreign bodies do not enter the cartridge.

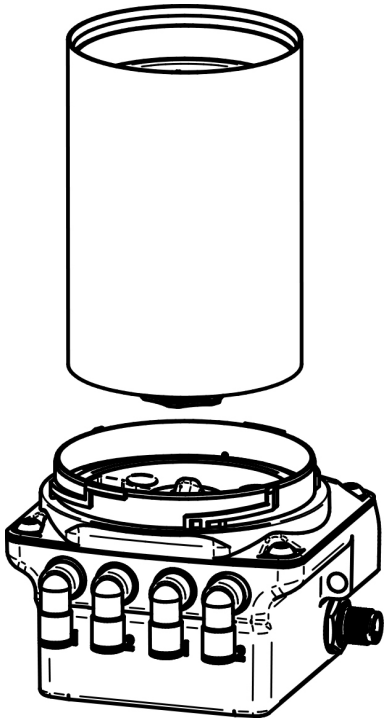

3. Mounting the lubricant cartridge

● Place the full lubricant cartridge on the FP4 D.
● Turn the lubricant cartridge clockwise onto the FP4 D.

ⓘ The end position is reached after two full rotations when the label of the lubricant cartridge is aligned with the front label of the FP4 D.

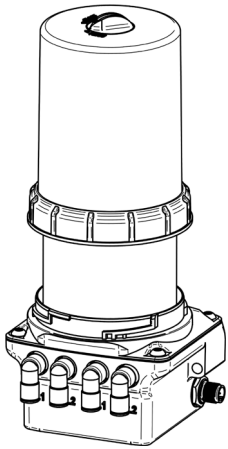

4. Assembling the housing on the power unit of the FP4 D.

● Place the dismantled housing on the FP4 D and press it onto the power unit.
● Fasten the housing to the power unit by turning the retaining ring clockwise.

ⓘ The retaining ring must snap into place when turning and be completely tightened.

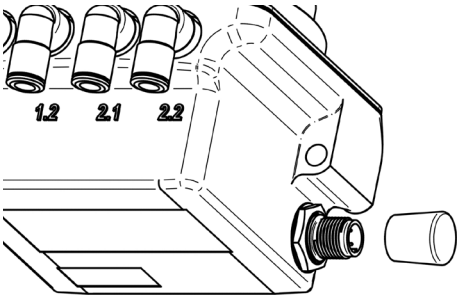

5. Remove the protective cap on the side of the FP4 D.

● Remove the black protective cap from the side of the electrical M12x1 interface.

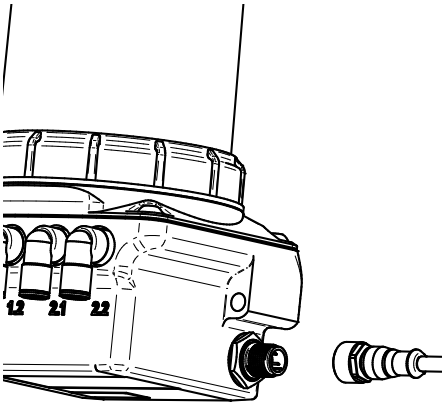

6. Connect the electrical interface

● Connect the FP4 D to the external power supply or controller via the M12x1 interface on the side of the FP4 D using a suitable connecting cable.

ⓘ Depending on the application, both connection cables with straight or angled sockets can be used.
ⓘ Please refer to chapter 8.1 for the condition of the connection cable.

	DANGER
	Defective or faulty electrical connections or unauthorized live components can lead to serious injuries or even death. ▪ Have all electrical connection work carried out by qualified personnel only. ▪ Replace damaged cables or plugs immediately. ▪ Before carrying out any electrical installation work, observe the five safety rules of electrical engineering: - Unlocking - Secure against unintentional restarting. - Check that there is no voltage. - Ground and short-circuit. - Cover adjacent live parts.

6.3 Commissioning

Mount the FP4 D carefully according to the steps described in chapter 6.2.
Depending on the scope of delivery, you must also carry out the following additional measures for the first-time commissioning:

1. Mechanical fastening
Fix the FP4 D mechanically. Pay particular attention to the maximum tightening torques permissible for the M5 female threads!

2. Electrical connection
Connect the FP4 D to the external controller (PLC) via the M12x1 interface using a suitable cable.

3. Check the assembly
Make sure that the FP4 D is properly and completely assembled. In particular, the battery must be inserted and a lubricant cartridge must be fitted.

4. Execute 12 seconds control signal
Execute the 12 seconds control signal. The detailed description can be found in chapter 8.2.4. FP4 D performs a certain number of strokes and transports the lubricant from the cartridge to the outlet.

5. Hydraulic connection
Connect the consumer hydraulically to the FP4 D. If you connect tubes to the FP4 D, make sure that the tubes and connectors are installed tightly, cleanly and correctly.

ⓘ Ideally, use tubes prefilled with the appropriate lubricant!

6. Check the settings on FP4 D
Check the basic settings of the FP4 D with the required values required for the lubrication point and adjust them if necessary. Changes must be made in the PLC program.

7. Operation and settings

7.1 General information

What you should know about operating and setting the FP4 D:

✓For operation, the FP4 D must be integrated into a control system (PLC) and must be commanded and controlled via the PLC. The FP4 D delivers one or more strokes (one stroke = 0.16 cm³) depending on the signals of the external control (PLC). Depending on the internal status of the FP4 D (e.g. cartridge empty), different output signals are issued by the FP4 D.

✓The disposable interchangeable cartridge with 250ml or 400ml lubricant guarantees a controlled and constant quality of the lubricant and is filled without air bubble inclusions. The FP4 D allows a high supply security of the lubrication point and prevents failures. The FP4 D in its present version is designed exclusively for the lubricant grease.

✓The FP4 D cannot be used in the present version without a lubricant cartridge. Depending on the version ordered the cartridge can already be included in the scope of delivery and may already be connected and installed in the FP4 D.

✓If you have any questions about your application and the correct settings for FP4 D, please contact the manufacturer (chapter I.II).

●Make sure that your PLC program is correct for your application and that the lubrication point is supplied with the correct amount of lubricant per time unit.
If this is the case, you can operate the FP4 D.
If this is not the case, change your PLC program accordingly.

ⓘTo use the FP4 D, it first has to be properly mounted and installed. The installation is very simple and described in detail in chapter 6.2.

ⓘIf you order a special version of the FP4 D from the factory, the information on the supplement sheet is decisive for you!

8. Input and output signals - External control (PLC)

The FP4 D operates as a pulse-controlled lubrication system only if unalterable input signals (high level) are transmitted from the PLC to the FP4 D via PIN 2 in a defined sequence. The FP4 D signals the respective status to the PLC via high/low levels, which can be tapped off at PIN 4, and thus enables comprehensive control or, by suitable programming of the PLC, differentiated evaluation of the different statuses. For the integration of the FP4 D into an external control, one input and one output must be provided on the control side.

8.1 Pin assignment - External control (PLC)

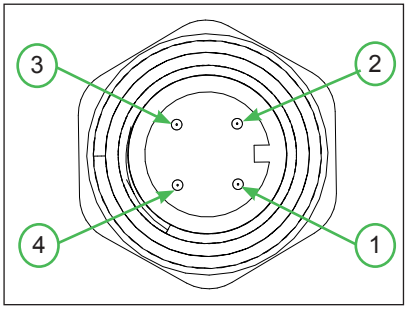

PIN-Assignment (PLC)		
PIN	**Assignment**	**Colour**
1	+24 V DC	brown
2	Input Signal PLC→FP4 D	white
3	Ground	blue
4	Output Signal FP4 D→PLC	black
Type: M12x1 female connector; 4-pin, A-coded		

For the electrical connection to an external control (PLC) of a system, the FP4 D has a 4-pin interface, which is designed as a plug connection with the standard industrial M12x1 connection.

ⓘThe FP4 D can be switched off completely by switching off the supply voltage. After reapplying the supply voltage, the FP4 D checks itself automatically but only operates after receiving an input signal from the PLC.

ⓘTo operate the FP4 D via an external controller (PLC), a program corresponding to the communication protocol must be created in the PLC.

ⓘThe output signal at PIN 4 can be tapped for further processing (e.g. indicator light or external control). The maximum permissible output current must not exceed I_{max} < 20mA. No inductive load (e.g. relay) may be connected!

ⓘAfter a longer standstill of the FP4 D the manual execution of the "Quick-Check" is recommended. You can use for example the 12 seconds control signal to trigger a certain number of donations via the PLC (chapter 8.2).

8.2 Input signals - External control (PLC)

The FP4 D provides the following unalterably defined control signals (input signals), which must be transmitted from the PLC to the FP4 D via PIN 2 of the electrical M12x1 interface as high level (+24 V DC).
The control signals must be generated as high level (+24 V) by the external controller (PLC) over certain times with a tolerance of +/- 0.1 seconds.

Signal length in seconds	Description	Function	Detail	Signal valid for FP4
2 high	Signal 2 Seconds	1 Stroke PK1	8.2.1	D411, D412
5 high	Signal 5 Seconds	1 Stroke PK2	8.2.2	D422, D423, D424
8 high	Signal 8 Seconds	1 Stroke PK1 and PK2	8.2.3	D422, D423, D424
12 high	Signal 12 Seconds	FIL-Function	8.2.4	D411, D412, D422, D423, D424
14 high	Signal 14 Seconds	Error acknowledgement	8.2.5	D411, D412, D422, D423, D424

ⓘThe input signals that your FP4 D can process depend on the design of the FP4 D. Compare your FP4 D with the different designs described in chapter 5 to find out which signals are important for your FP4 D and can be used for control. The designation of your FP4 D can be found on the nameplate attached to the side of the FP4 D, see chapter 3.1, fig. 1.

ⓘThe FP4 D only processes the control signals listed in the table up to a maximum length of 14 seconds. If a high level (+24 V DC) is present outside the tolerances, the FP4 D does not react. If a high level (+24 V DC) is applied to PIN 2 of the electrical interface for longer than 15 seconds, the LCD will display --- and the FP4 D will not react.

8.2.1 Control signal 2 seconds

The control signal 2 seconds triggers a single dispensing process. After a specified pause time, this control signal can be repeated or another control signal can be sent. The FP4 D reacts only in a certain operating state to control signals at PIN 2. The operating states are output by the FP4 D via PIN 4 as a high/low level and must be tapped and processed accordingly in the PLC.

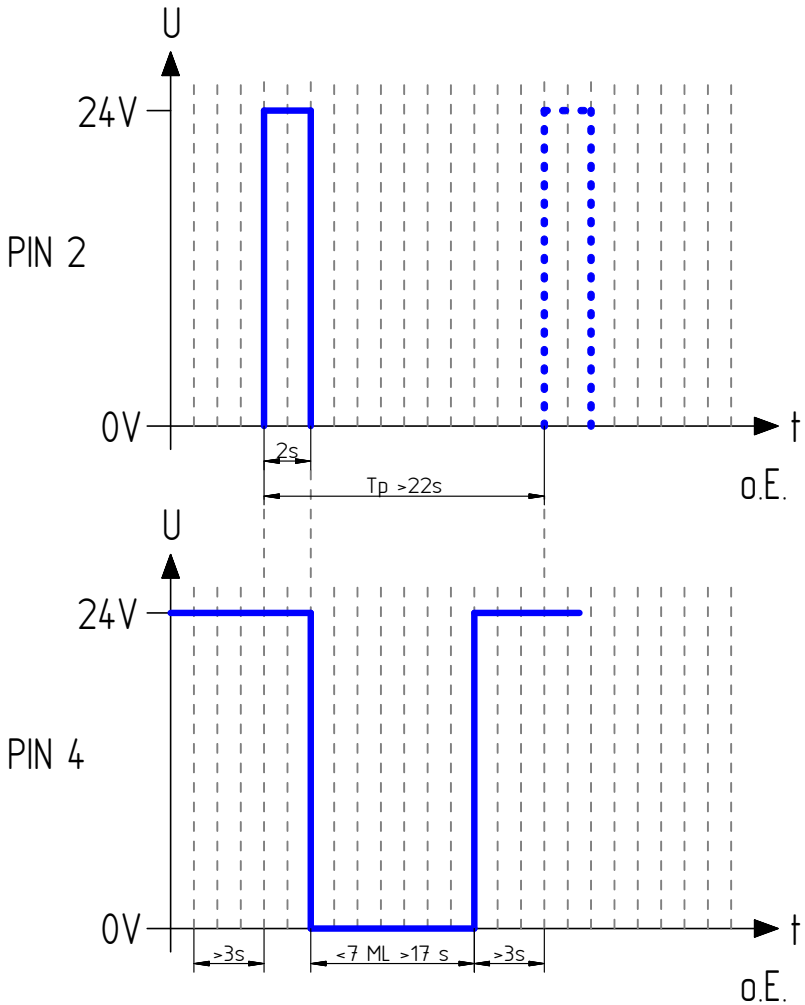

Tp: Pause time
ML: Motor running time

Description:

✓The FP4 D is properly connected to an external controller via the electrical interface and connected to the power supply.

●The FP4 D sends a permanent output signal (high level) to PIN 4, which indicates to the external control (PLC) that it is ready for operation. This output signal must be permanently and continuously present for >3 seconds. Control by the external controller is only possible if this condition is present.
●The control signal 2 seconds with a signal length of 2 (1.9 ... 2.1) seconds high level can be sent from the external control (PLC) to the FP4 D.
●Immediately after the control signal drops, the motor run (ML) of the FP4 D starts and 0.16 cm³ lubricant is conveyed to the outlet. Simultaneously with the start of the motor run (ML), the FP4 D sends a low level output signal to the external controller (PLC) as confirmation for the duration of the motor run (ML).
●The motor running time (ML) depends on various conditions, including the counter-pressure present or built up in the hydraulic system and the temperature. With the FP4 D, the motor running time (ML) is 7...17 seconds.
●At the end of an error-free and successful motor run (ML), the output signal at FP4 D changes from a low level to a high level.

ⓘA possible next control signal can be sent from the external controller (PLC) at the earliest >3 seconds after the end of the error-free and successful motor run. In the meantime, the FP4 D does not process any control signals.

ⓘIn order to ensure a reliable and unambiguous recognition of the control signal, a pause must be observed. For the control signal 2 seconds, the FP4 D requires a pause time (Tp) of at least 22 seconds between two identical or different control signals.

ⓘIf the integrated microelectronics of the FP4 D has detected an error during or immediately after the end of the motor run (ML), this is transmitted to the external controller (PLC) by the corresponding output signal (section 8.3).

8.2.2 Control signal 5 seconds

The 5 second control signal triggers a single dispensing operation on pump unit 2 when a pump unit 2 is present. After a certain pause time, this control signal can be repeated or another control signal can be sent.
The FP4 D reacts only in a certain operating state to control signals at PIN 2. The operating states are output by the FP4 D via PIN 4 as a high/low level and must be tapped and processed accordingly in the PLC.

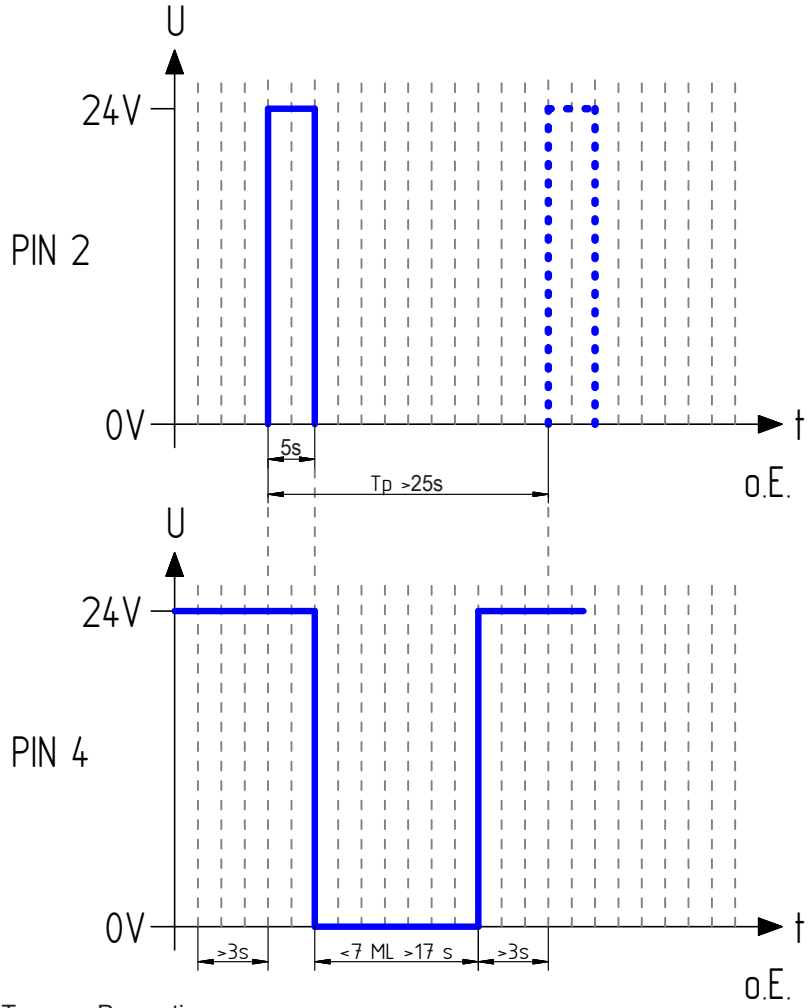

Tp: Pause time
ML: Motor running time

Description:

✓The FP4 D is properly connected to an external controller via the electrical interface and connected to the power supply.

●The FP4 D sends a permanent output signal (high level) to PIN 4, which indicates to the external control (PLC) that it is ready for operation. This output signal must be permanently and continuously present for >3 seconds. Control by the external controller is only possible if this condition is present.
●The control signal 2 seconds with a signal length of 5 (4.9 ... 5.1) seconds high level can be sent from the external control (PLC) to the FP4 D.
●Immediately after the control signal drops, the motor run (ML) of the FP4 D starts and 0.16 cm³ lubricant is conveyed to the outlet. Simultaneously with the start of the motor run (ML), the FP4 D sends a low level output signal to the external controller (PLC) as confirmation for the duration of the motor run (ML).
●The motor running time (ML) depends on various conditions, including the counter-pressure present or built up in the hydraulic system and the temperature. With the FP4 D, the motor running time (ML) is 7...17 seconds.
●At the end of an error-free and successful motor run (ML), the output signal at FP4 D changes from a low level to a high level.

ⓘA possible next control signal can be sent from the external controller (PLC) at the earliest >3 seconds after the end of the error-free and successful motor run. In the meantime, the FP4 D does not process any control signals.

ⓘIn order to ensure a reliable and unambiguous recognition of the control signal, a pause must be observed. For the control signal 5 seconds, the FP4 D requires a pause time (Tp) of at least 25 seconds between two identical or different control signals.

ⓘIf the integrated microelectronics of the FP4 D has detected an error during or immediately after the end of the motor run (ML), this is transmitted to the external controller (PLC) by the corresponding output signal (section 8.3).

8.2.3 Control signal 8 seconds

The 8 second control signal triggers a single dispensing operation at pump unit 1 and pump unit 2 when pump unit 2 is present. After a certain pause time, this control signal can be repeated or another control signal can be sent.
The FP4 D reacts only in a certain operating state to control signals at PIN 2. The operating states are output by the FP4 D via PIN 4 as a high/low level and must be tapped and processed accordingly in the PLC.

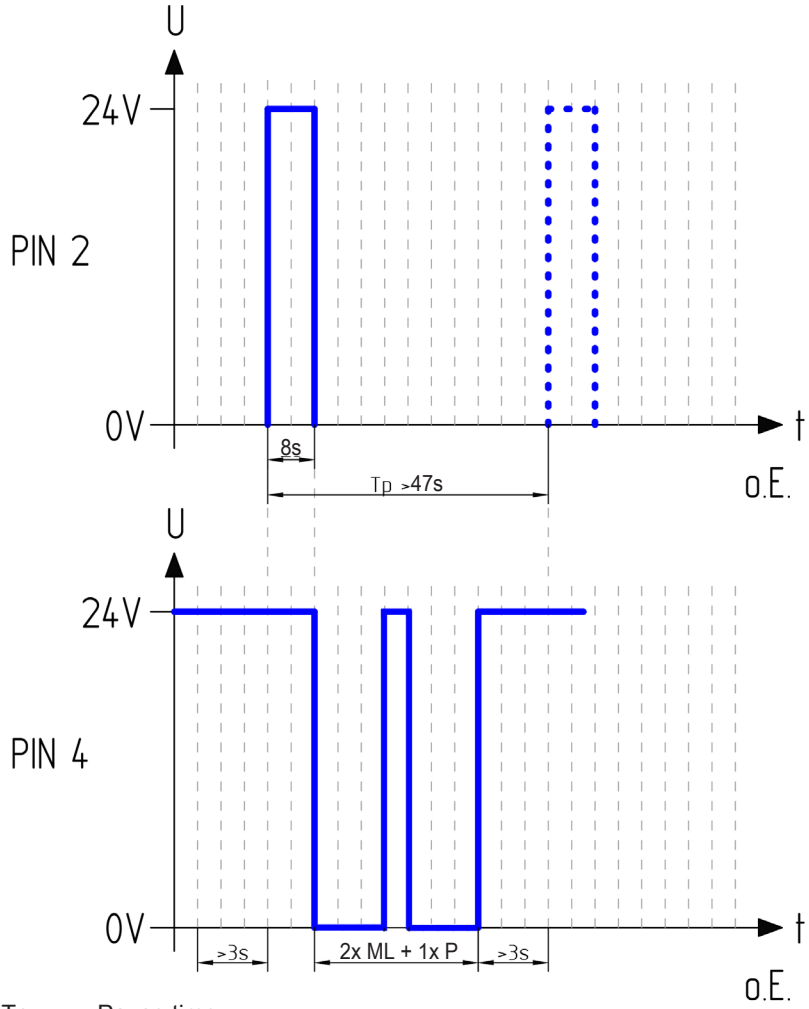

Tp: Pause time
ML: Motor running time

Description:

✓The FP4 D is properly connected to an external controller via the electrical interface and connected to the power supply.

●The FP4 D sends a permanent output signal (high level) to PIN 4, which indicates to the external control (PLC) that it is ready for operation. This output signal must be permanently and continuously present for >3 seconds. Control by the external controller is only possible if this condition is present.
●The control signal 2 seconds with a signal length of 8 (7.9 ... 8.1) seconds high level can be sent from the external control (PLC) to the FP4 D.
●Immediately after the control signal drops, the motor run (ML) of the FP4 D starts and 0.16 cm³ lubricant is conveyed to the outlet. Simultaneously with the start of the motor run (ML), the FP4 D sends a low level output signal to the external controller (PLC) as confirmation for the duration of the motor run (ML).
●The motor running time (ML) depends on various conditions, including the counter-pressure present or built up in the hydraulic system and the temperature. With the FP4 D, the motor running time (ML) is 7...17 seconds.
●At the end of an error-free and successful motor run (ML), the output signal at FP4 D changes from a low level to a high level.

ⓘA possible next control signal can be sent from the external controller (PLC) at the earliest >3 seconds after the end of the error-free and successful motor run. In the meantime, the FP4 D does not process any control signals.

ⓘIn order to ensure a reliable and unambiguous recognition of the control signal, a pause must be observed. For the control signal 8 seconds, the FP4 D requires a pause time (Tp) of at least 47 seconds between two identical or different control signals.

ⓘIf the integrated microelectronics of the FP4 D has detected an error during or immediately after the end of the motor run (ML), this is transmitted to the external controller (PLC) by the corresponding output signal (section 8.3).

8.2.4 Control signal 12 seconds

The control signal for 12 seconds triggers the FIL function by the external control. A total of 40 dispensing operations per pump unit are carried out automatically one after the other. After a certain pause time, this control signal can be repeated or another control signal can be sent. The FP4 D reacts only in a certain operating state to control signals at PIN 2. The operating states are output by the FP4 D via PIN 4 as high/low levels and must be tapped and processed accordingly in the PLC.

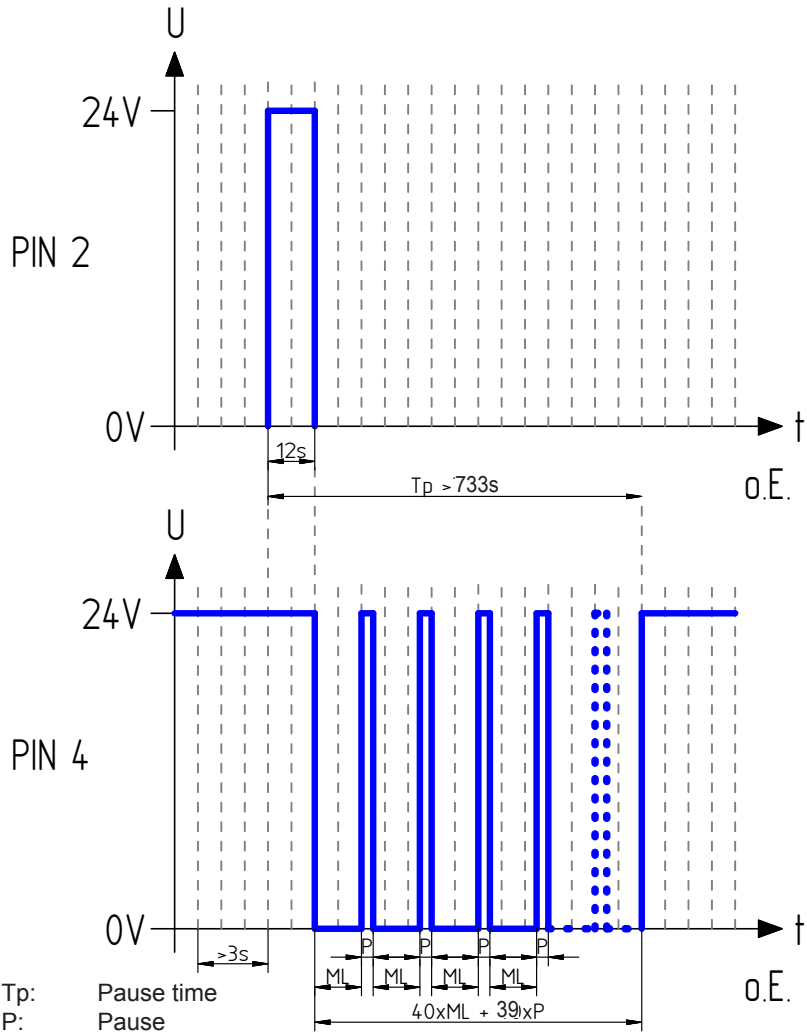

Tp: Pause time
P: Pause
ML: Motor running time

Description:

✓The FP4 D is properly connected to an external controller via the electrical interface and connected to the power supply.

●The FP4 D sends a permanent output signal (high level) to PIN 4, which indicates to the external control (PLC) that it is ready for operation. This output signal must be permanently and continuously present for >3 seconds. Control by the external controller is only possible if this condition is present.
●The control signal 2 seconds with a signal length of 12 (11.9 ... 12.1) seconds high level can be sent from the external control (PLC) to the FP4 D.
●Immediately after the control signal drops, the motor run (ML) of the FP4 D starts and 0.16 cm³ lubricant is conveyed to the outlet. Simultaneously with the start of the motor run (ML), the FP4 D sends a low level output signal to the external controller (PLC) as confirmation for the duration of the motor run (ML).
●The motor running time (ML) depends on various conditions, including the counter-pressure present or built up in the hydraulic system and the temperature. With the FP4 D, the motor running time (ML) is 7...17 seconds.
●At the end of each error-free and successful motor run (ML), the output signal at the FP4 D changes from a low level to a high level for a short pause time P = 2 seconds.
●A total of 40 engine runs and donations will take place immediately one after the other. 40 x 0.16 cm³ = 6.4 cm³ lubricant is conveyed from the cartridge to the outlet.

ⓘA possible next control signal can be sent from the external controller (PLC) at the earliest >3 seconds after the end of the error-free and successful motor run. In the meantime, the FP4 D does not process any control signals.

ⓘIn order to ensure a reliable and unambiguous recognition of the control signal, a pause must be observed. For the control signal 12 seconds, the FP4 D has a pause time (Tp) between two identical or different control signals of at least 733 ($Tp=ML_{max}$ x 40 strokes + P x 39 + signal length + 3 seconds) seconds.

ⓘFor an FP4 D with two pump units, 40 filling strokes **per pump unit** are triggered when the control signal is triggered for 12 seconds. The pause time (Tp) is increases to 1553 seconds.

ⓘIf the integrated microelectronics of the FP4 D has detected an error during or immediately after the end of the motor run (ML), it is transmitted to the external controller (PLC) by the corresponding output signal (section 8.3).

8.2.5 Control signal 14 seconds

The control signal 14 seconds is used to acknowledge error messages of errors E2 and E3. It is the only control signal that the FP4 D can process when a low level output signal is sent. Irrespective of the basic possibility of remote acknowledgement of an error, it is essential to identify and eliminate the cause when an error message is present.

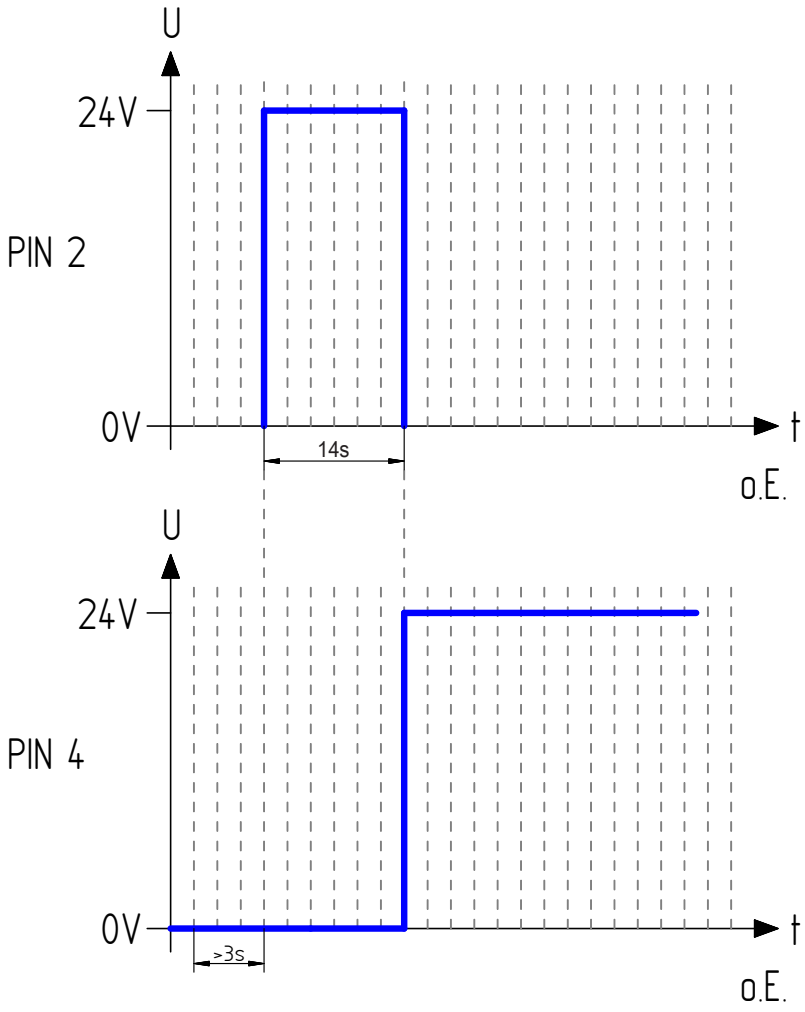

Description:

✓The FP4 D is properly connected to an external controller via the electrical interface and connected to the power supply.
✓There is an error at the FP4 D.

●The FP4 D sends a permanent output signal (low level) to PIN 4, which indicates an error to the external controller (PLC). This output signal must be permanently and continuously present for >3 seconds.
●The control signal 14 seconds with a signal length of 14 (13.9 ... 14.1) seconds high level can be sent from the external control (PLC) to the FP4 D. The control signal is sent to the FP4 D by the external control (PLC).
●At the end of the control signal, the integrated microelectronics of the FP4 D will automatically check itself:

+If this internal check is successful, the output signal at the FP4 D changes from a low level to a high level; the error is thus acknowledged and the FP4 D is ready for operation again.
- If this internal check is not successful, the FP4 D continues to send a low level output signal. The error is still present. For further measures in this case: Chap. 8.3.4.

ⓘA possible next control signal can be sent from the external controller (PLC) at the earliest >3 seconds after the end of the error-free and successful motor run. In the meantime, the FP4 D does not process any control signals.

ⓘ Regardless of the principle of remote acknowledgement of an error, it is essential to identify and eliminate the cause when an error message is present.

8.3 Output signals - External control (PLC)

Description	Output signal (PIN 4)	Detail
Ready for operation	high, permanent	Chap. 8
Receiving control signal	high, permanent	Chap. 8
Dispensing process	low, 7...17 Seconds	Chap. 8
Cartridge empty	0,5Hz-square wave signal, permanent	Chap. 8.3.1
Error	low, permanent	

If an output signal as low level (0V) is permanently present at PIN 4 for longer than 3s and no dispensing process is currently being performed by the FP4 D, there is an error at the FP4 D. The only thing that can be determined by the signalling is that there is an error at the FP4 D. The cause must be determined and eliminated by the operator. Chapters 8.3.2, 8.3.3 and 8.3.4 provide a procedure and possible causes for the pump error message.

8.3.1 Empty level

The FP4 D is equipped with a sensor which detects the empty level of the lubricant cartridge. After reaching the empty level, the FP4 D no longer delivers lubricant. This ensures that no air enters the FP4 D or the lubricant lines. The empty state message (error E1) is transmitted to the external control (PLC). For this purpose, a separate, unique output signal is provided, which can be easily and reliably detected by the external control (PLC).

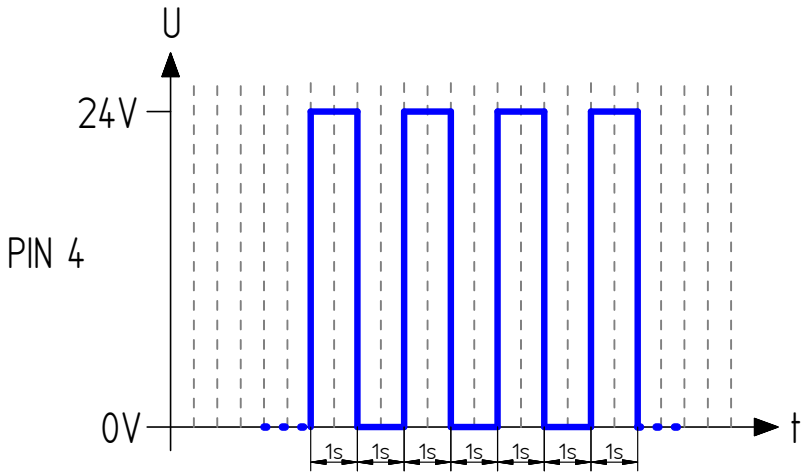

Description:

✓The FP4 D is properly connected to an external controller via the electrical interface and connected to the power supply.

- The Empty state signal can only occur immediately after a donation.
- The Empty state signal must and cannot be acknowledged. Remedial action is described in chapter 9.2.

At the same time as removing the cartridge, the FP4 D sends a permanent low level (0 V) as output signal to PIN 4.

ⓘ The FP4 D does not process control signals until all errors have been eliminated.

The transition of the output signals when changing a cartridge on the FP4 D is shown and described below:

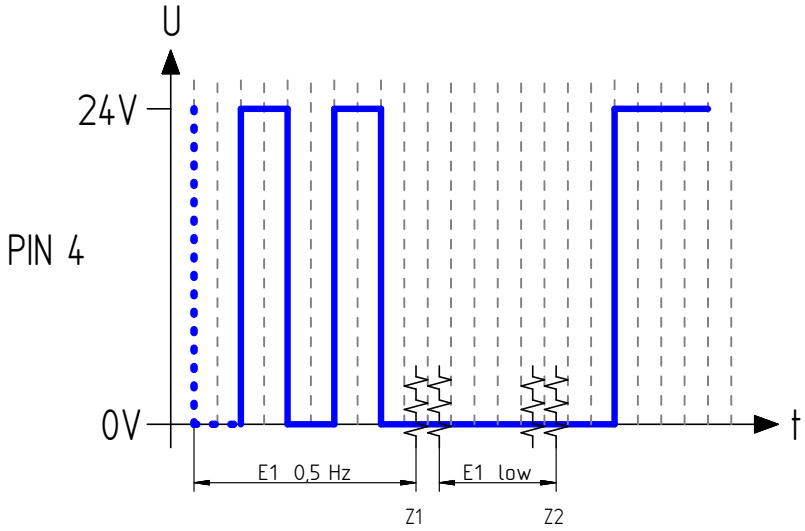

Z1: Removing the empty cartridge
Z2: Mounting the new cartridge

Description:

✓The FP4 D is properly connected to an external controller via the electrical interface and connected to the power supply.

●The empty state of the cartridge occurred after a donation, the output signal of the FP4 D is initially the 0.5Hz square wave signal (empty state signal) (0/+24 V).
●Z1 indicates the time of removal of the empty cartridge. The output signal of the FP4 D now changes from a 0.5Hz square wave signal to a permanent low signal (0V).
●Z2 indicates the time for screwing on a new, full cartridge. The output signal of the FP4 D now changes from a permanent low signal (0V) to a permanent high signal (+24V). In this way the FP4 D signals to the external controller (PLC) that it is ready for operation again.
●If the empty state signal has occurred during the execution of the control signal 12 seconds, the outstanding strokes are continued after the new cartridge has been screwed on.

ⓘ The FP4 D does not process control signals until all errors have been eliminated.

8.3.2 Error Overload

The Error Overload signals a hydraulic overload during a dispensing process, i.e. the maximum pressure is exceeded.

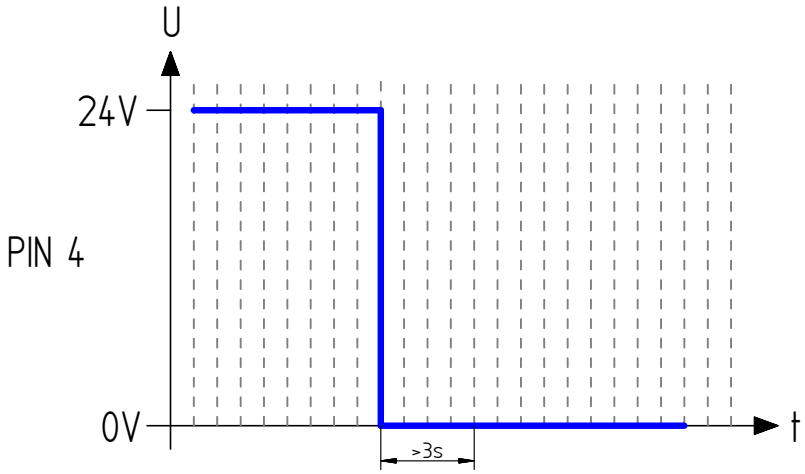

Description:

✓The FP4 D is properly connected to an external controller via the electrical interface and connected to the power supply.
✓The FP4 D has been successfully controlled by the external control (PLC) immediately before the occurrence of error E2 and has (attempted) to perform a dispensing operation.

●When the maximum permissible pressure is reached during or after a donation, the FP4 D sends a permanent output signal as low level (0 V) to PIN 4 for external control (PLC).
●The error E2 (overload) must be acknowledged with the control signal 14 seconds (chapter 8.2.5) after elimination of the cause(s).

ⓘ The FP4 D does not process control signals until all errors have been eliminated.

8.3.3 Error Under- or Overvoltage

Error Under- or Overvoltage indicates that the FP4 D power supply is not within the specified parameters.

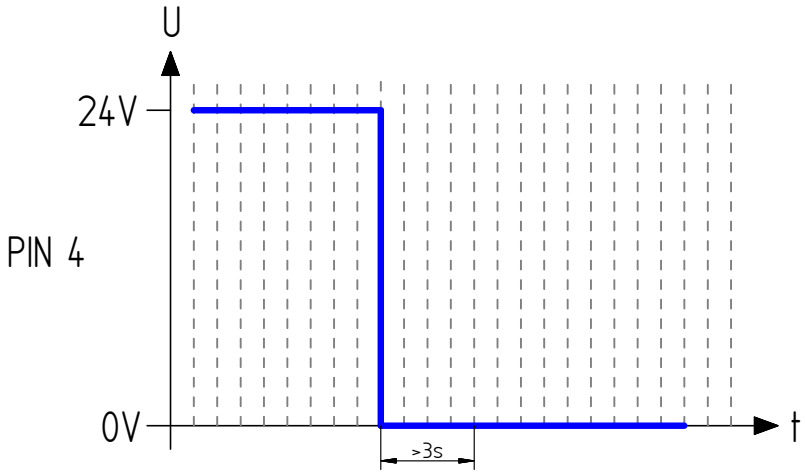

Description:

✓The FP4 D is properly connected to an external controller via the electrical interface and connected to the power supply.

●If the supply voltage is too low, the FP4 D sends a permanent output signal as low level (0 V) to PIN 4 for external control (PLC).
●Check the supply voltage and compare it with the parameters given in the FP4 D technical data.
●Error E3 (undervoltage) must be acknowledged with the control signal 14 seconds (chapter 8.2.5) after elimination of the cause(s).

ⓘ The FP4 D does not process control signals until all errors have been eliminated.

8.3.4 Critical error

The Critical Error indicates that the integrated microelectronics has detected a critical error and that the FP4 D is not operating within the valid parameters. The cause can be mechanical, electronic or any other influencing variable.

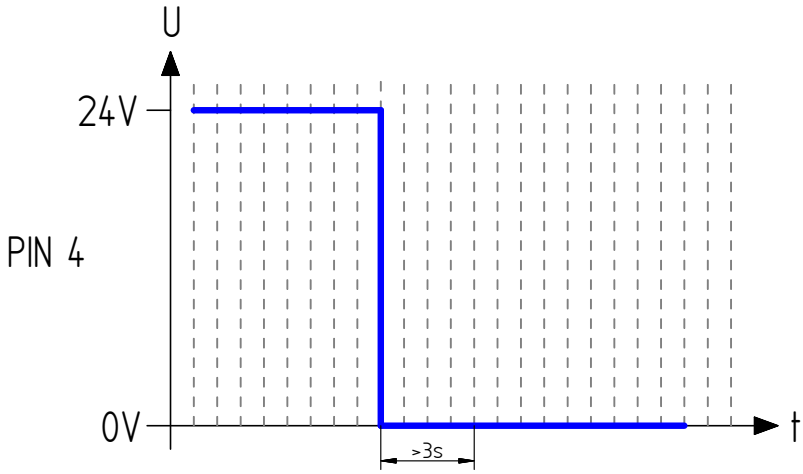

Description:

✓The FP4 D is properly connected to an external controller via the electrical interface and connected to the power supply.

●In an (internal) diagnosis, the critical (exception) error E4 has been detected.
●The error E4 **cannot** be corrected by you on site and **cannot** be acknowledged by you on the FP4 D!
●Remove the FP4 D with the lubricant cartridge screwed on and return the complete lubrication system to the manufacturer with a detailed description of the fault. The address of the manufacturer is given in chapter I.II.

ⓘ Do not open the FP4 D without authorization! Observe the relevant notes and regulations in these instructions for proper use (section 2.5) and warranty (section 2.6)!

9. Maintenance and disposal

- Before starting any maintenance work, inform yourself about the general safety instructions (see Chapter 2) and observe the relevant local and operational safety regulations.
- Do not deactivate any protective device without authorization!

9.1 Maintenance schedule

The following maintenance schedule must be observed for the FP4 D:

Maintenance	Commis-sioning	After 500 hours or after 3 months	Every year	If required
Cleaning	x	x	x	x*
Visual check	x	x	x	x*
Cartridge change	x**		x***	x*

* Depending on operating conditions and lubricant consumption
** Depending on delivery status (ordered version)
*** Recommendation after 2 years at the latest

9.1.1 Visual check

- Check the entire lubrication system (FP4 D and any connected accessories including tubes and distributors) for external damage (e.g. loose or loosened tubes) by a thorough and conscientious visual inspection.
- Check the condition of the lubrication point for correct supply of lubricant.
- Replace damaged or defective parts immediately to ensure permanent lubrication.
- Check the filling level of the cartridge on the FP4 D.
- Check possible error messages on the FP4 D and remedy the causes accordingly.

9.1.2 Cleaning

- Clean the FP4 D from dirt using suitable cleaning agents (e.g. absorbent towels, cloths).

	NOTICE
	Compressed air can damage the seals of the FP4 D as well as transport dirt and foreign bodies into the FP4 D or the lubricant. ▪ Do not use compressed air to clean the FP4 D.

9.1.3 Recommissioning after maintenance

- Reinstall all safety devices and make sure that no tools remain in the danger area.
- Check that the FP4 D is turned on.
- Carry out a "Quick Check" (test run) using the control signal 2 seconds (chapter 8.2.1).

9.2 Cartridge change

NOTICE

A used lubricant cartridge must not be replaced on the FP4 D, as the integrated stroke counter of the FP4 D is automatically reset by the cartridge sensor after a cartridge has been removed.

- Only use full lubricant cartridges.

NOTICE

Only use original lubricant cartridges with lubricant approved by the manufacturer.

- Observe the maximum shelf life of lubricant filled in cartridges.

NOTICE

It is not possible to refill empty or opened lubricant cartridges.

NOTICE

Make sure you use the same lubricant in the new cartridge that is already in use.

- Compare the data on the lubricant cartridge.

The cartridge only needs to be changed if it is empty or the service life of the lubricant has been exceeded. The cartridge can be changed during normal operation of the FP4 D.

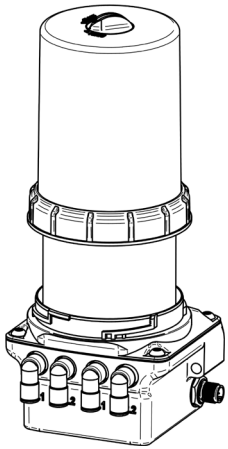

1. Remove the housing from the power unit of the FP4 D.

● Separate the housing from the power unit by turning the retaining ring counterclockwise.

ⓘ Make sure that no dirt, water or foreign bodies enters the lubricant inlet.

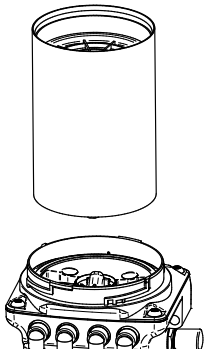

2. Remove the empty cartridge.

● Turn the empty cartridge counterclockwise and pull it off.

ⓘ Pay attention to cleanliness when carrying out the work. Be sure to prevent dirt, liquids and foreign bodies from entering the grease inlet.

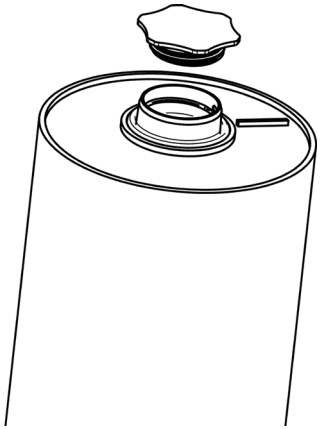

3. Remove the cartridge cap from the new cartridge.

● Turn the cap of the lubricant cartridge counterclockwise and pull it off.

ⓘ Pay attention to cleanliness when carrying out the work. Be sure to prevent dirt, liquids and foreign bodies from entering the cartridge.

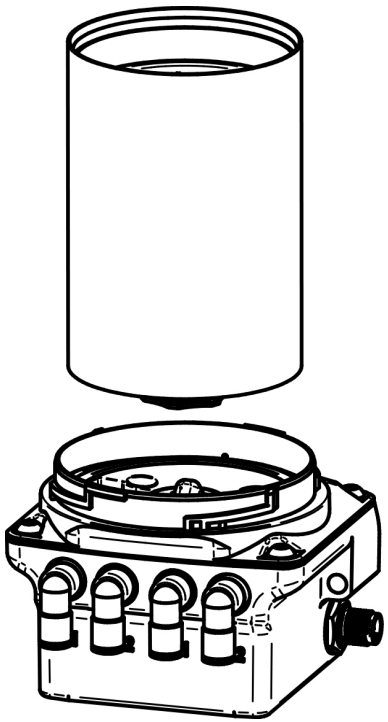

4. Mounting the new lubricant cartridge

- Place the full lubricant cartridge on the FP4 D.
- Turn the lubricant cartridge clockwise onto the FP4 D.

ⓘ The end position is reached after two full rotations when the label of the lubricant cartridge is aligned with the front label of the FP4 D.

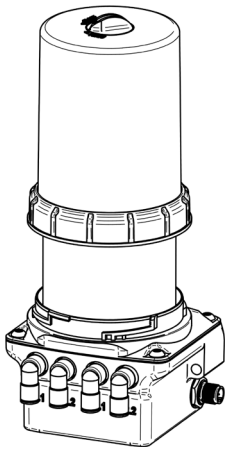

5. Assembling the housing on the power unit of the FP4 D.

- Place the dismantled housing on the FP4 D and press it onto the power unit.
- Fasten the housing to the power unit by turning the retaining ring clockwise.

ⓘ The retaining ring must snap into place when turning and be completely tightened.

- Carry out the work as described above.

ⓘ If the empty state of the cartridge (Error E1) was reached during a dispensing cycle, it is automatically interrupted and continued automatically after completion of the work explained above.

9.3 Disposal

- When disposing the FP4 D, empty or opened cartridges, observe the relevant national regulations in force.

- When disposing the FP4 D, observe the relevant safety data sheets and disposal instructions for the individual components.

ⓘ It is not possible to refill empty lubricant cartridges.

10. Released accessories

The present FP4 D can be considerably extended by the extensive system and accessory program. This may necessitate changes to the PLC program, which controls the FP4 D to ensure reliable and proper operation of the FP4 D together with the hydraulically connected accessories.

Item-Nr.	Illustration	Designation	Application
700709	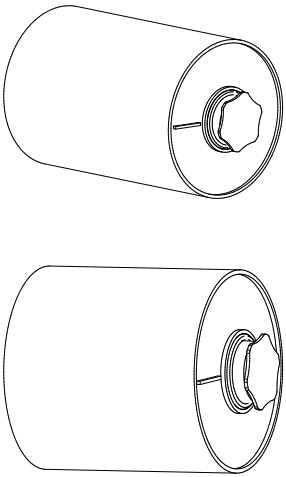	Cartridge FP4, 400ml, TSG OG1	Adhesive grease for open gears
700700		Cartridge FP4, 400ml, TSG U2	Universal grease
700707		Cartridge FP4, 400ml, TSG FG2	H1 grease
700705		Cartridge FP4, 400ml, TSG M2	Multi-Purpose grease
211427		Cartridge FP4, 250ml, TSG OG1	Adhesive grease for open gears
211424		Cartridge FP4, 250ml, TSG U2	Universal grease
701546		Cartridge FP4, 250ml, TSG FG2	H1 grease
211425		Cartridge FP4, 250ml, TSG M2	Multi-Purpose grease
700374		Power supply unit, incl. connection cable with M12x1 socket, for Flexx-Pump 24VDC and FlexxMaster	
700078		Connector Cable 4x0,34mm², max. 4A, energy chain suitable PUR, without LED, length 5m	
on request		Progressive distributor TSPV 2-50 ... TSPV 14-50	Multi-Point lubrication

10.1 Lubricants

Only use lubricants approved by the manufacturer TriboServ GmbH & Co. KG in the original cartridges developed and manufactured exclusively for FP4 D.

	NOTICE
	The lubricant used in each case differs according to the application. The respective designation can be found on the label of the cartridge.

Further information on lubricants, documentation and safety data sheets can be obtained directly from the manufacturer TriboServ GmbH & Co. KG.

10.2 Tube lengths

In principle, the recommendation is to install the FP4 D as close as possible to the consumer (lubrication point). Ideally, this should be done directly at or on the lubrication point. In cases where this is not possible due to the installation space or for reasons of reachability or accessibility, tubes can also be used between the FP4 D and the lubrication point (or distributor).
If the case arises that you cannot mount the FP4 N directly at the lubrication point, contact the manufacturer to verify your application. The influence of temperature, the grease used, the hoses and accessories used does not allow a general statement to be made about the possible hose length on the FP4 N.

11. Appendix

11.1 Dimension sheet and installation dimensions

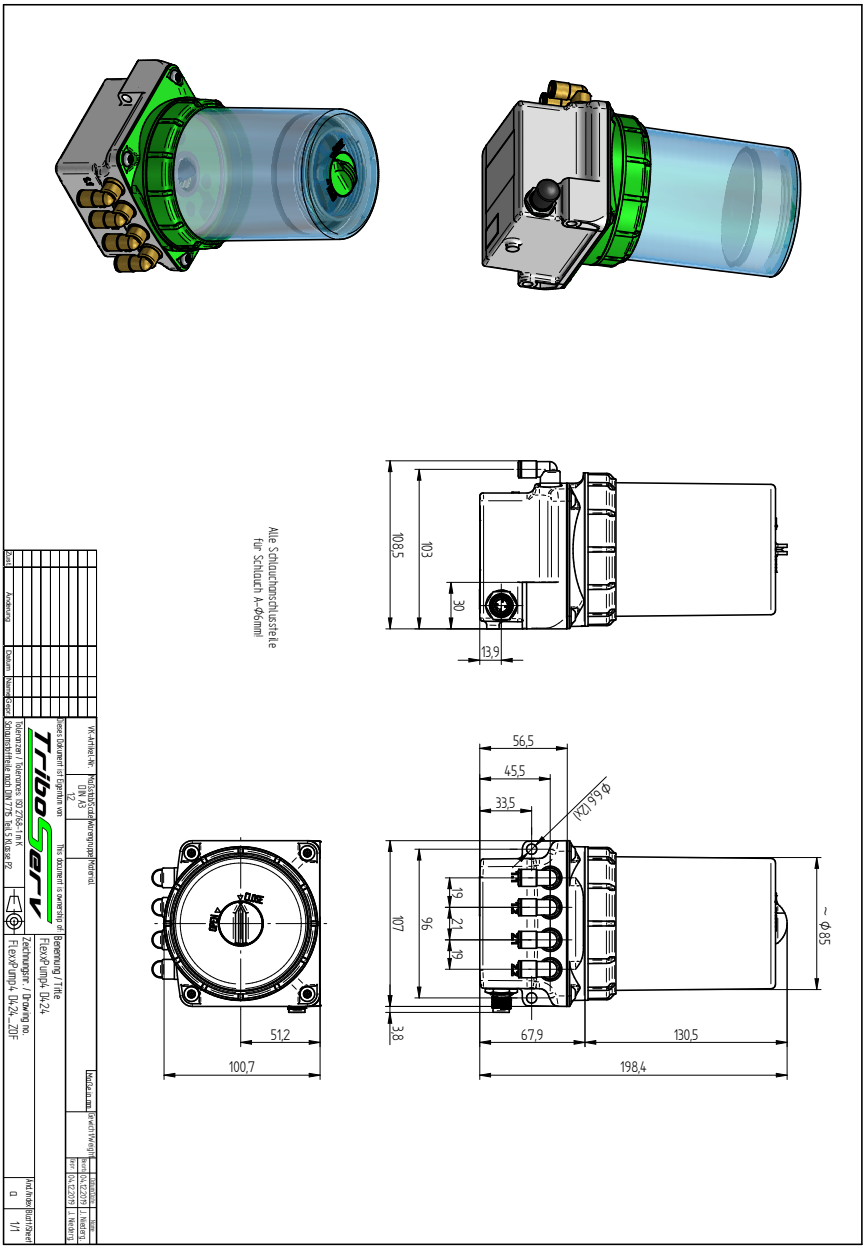

11.2 EC/EU Declaration of conformity

Declaration of EG conformity

According to the Machinery Directive 2006/42/EG of 2006, May 17th

Herewith the manufacturer
TriboServ GmbH & Co. KG, Gelthari-Ring 3, D-97505 Geldersheim,
declares that the following lubricating systems

FlexxPump4 – D211, D212, D222, D223, D224, D211A, D212A, D222A, D223A, D224A
FlexxPump4 – D411, D412, D422, D423, D424, D411A, D412A, D422A, D423A, D424A
as well as the FlexxPump4 – D… with the suffix OIL

delivered by us, concerning design and construction as well as the model put into circulation, comply with the EG directives 2006/42/EG.
In particular, the following harmonized standards were applied:

EN 12100:2011-03 Safety of machinery

According the EG directive on Electromagnetic Compatibility 2014/30/EU

The manufacturer herewith declares that the following lubricating systems

FlexxPump4 – D211, D212, D222, D223, D224, D211A, D212A, D222A, D223A, D224A
FlexxPump4 – D411, D412, D422, D423, D424, D411A, D412A, D422A, D423A, D424A
as well as the FlexxPump4 – D… with the suffix OIL

delivered by us, concerning design and construction as well as the model put into circulation, comply with the above mentioned EU directive.
In particular, the following harmonized standards were applied:

EN 61000-6-2, EN 61000-6-4 Electromagnetic Compability (EMC)

Authorized representative for the compilation of technical documentation:
Dr.-Ing. Michael Weigand
General Manager
TriboServ GmbH & Co. KG
Gelthari-Ring 3
D-97505 Geldersheim

Geldersheim, 31.01.2020

Dr.-Ing. Michael Weigand, General Manager

TriboServ GmbH & Co. KG
Gelthari-Ring 3, D-97505 Geldersheim
Telefon +49 (0) 9721 -47396 - 60
Telefax +49 (0) 9721 -47396 - 69
www.triboserv.de

TriboServ GmbH & Co. KG
Gelthari-Ring 3
D-97505 Geldersheim
Tel: +49-(0)9721-473 966-0
Fax: +49-(0)9721-473 966-9
Info@TriboServ.de
www.triboserv.de